LC-9500HRT **END OF LIFE** **GK46-00001-XXXX**

EXERCISE BIKE

SN: 190000-199207

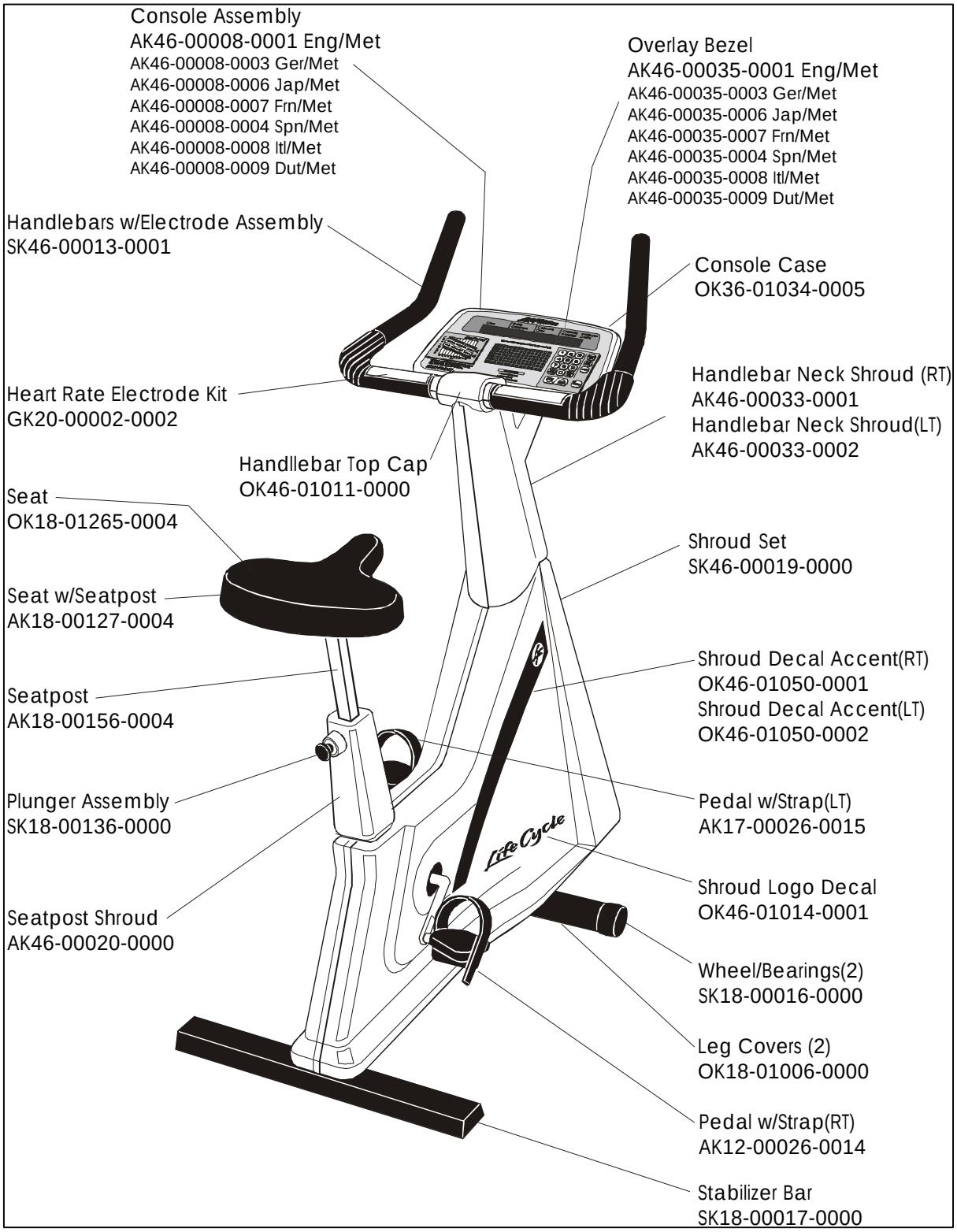

LC-9500HRT
EXERCISE BIKE

GK46-00001-XXXX
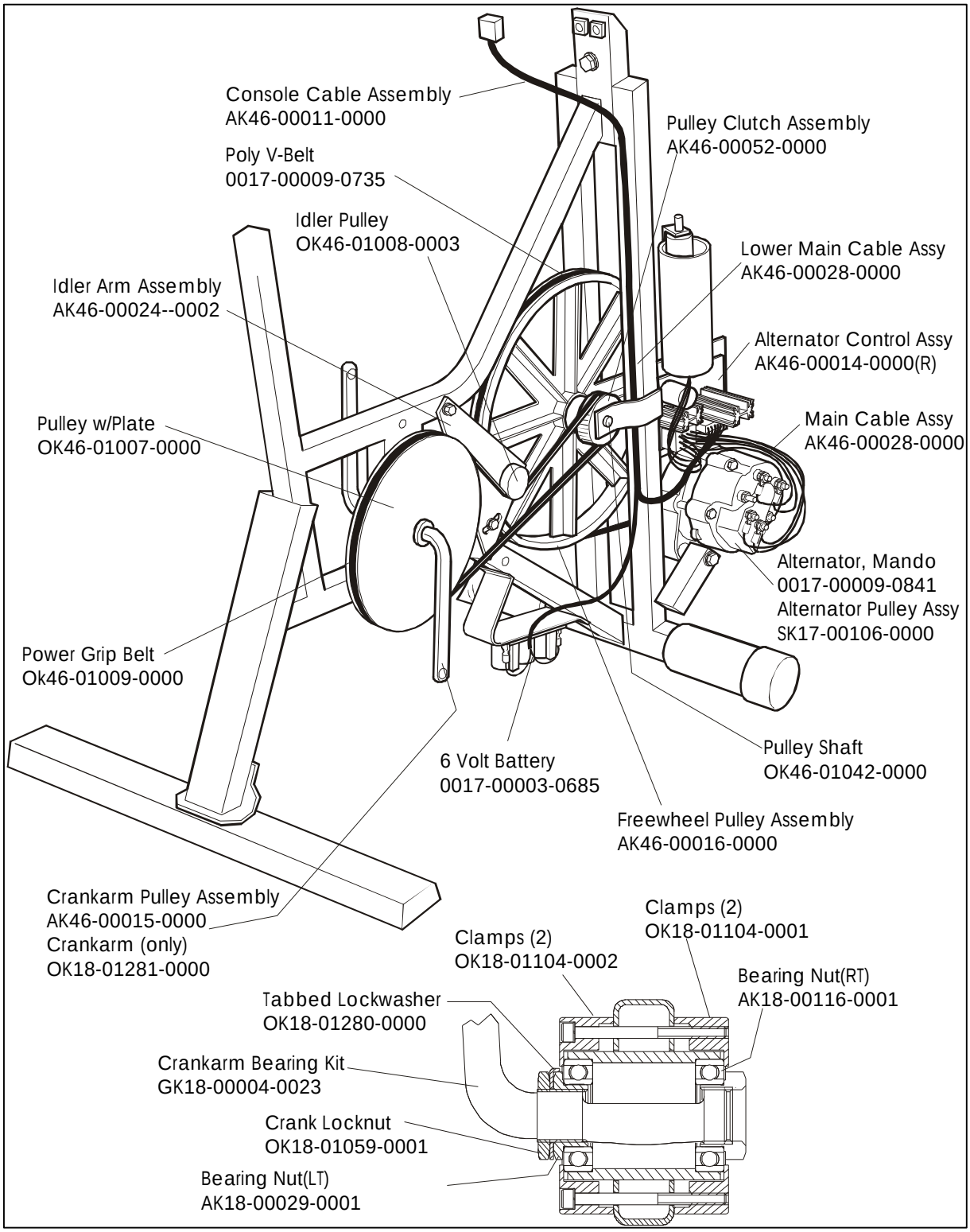
SN: 190000-199207